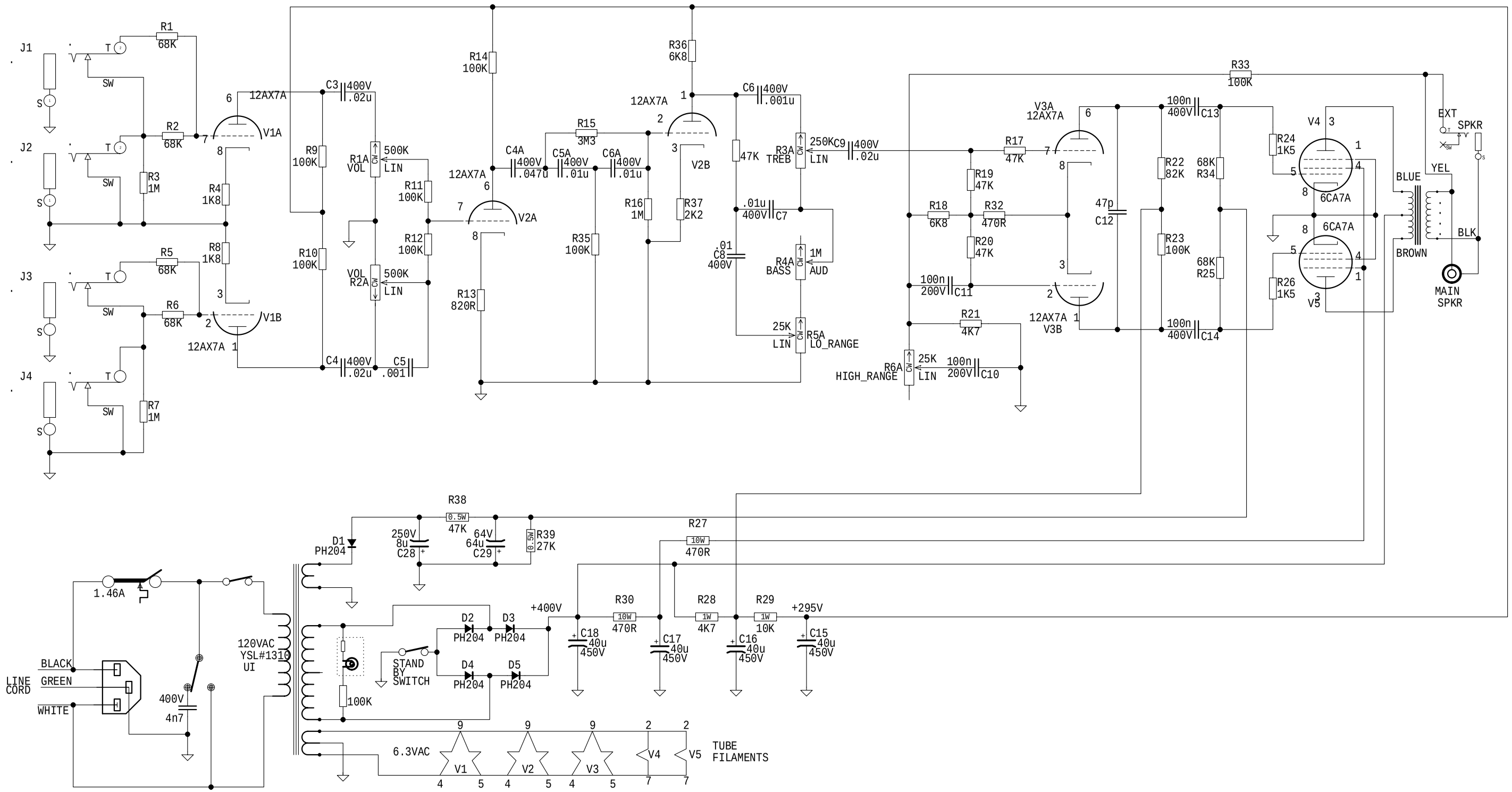

YORKVILLE	DATE: MAY/01/74	MODELS: YBA-1 .	SCH ISSUE: 5.00
	NAME: YBA-1V5.SCH	PCB#: .	TITLE: YBA-1