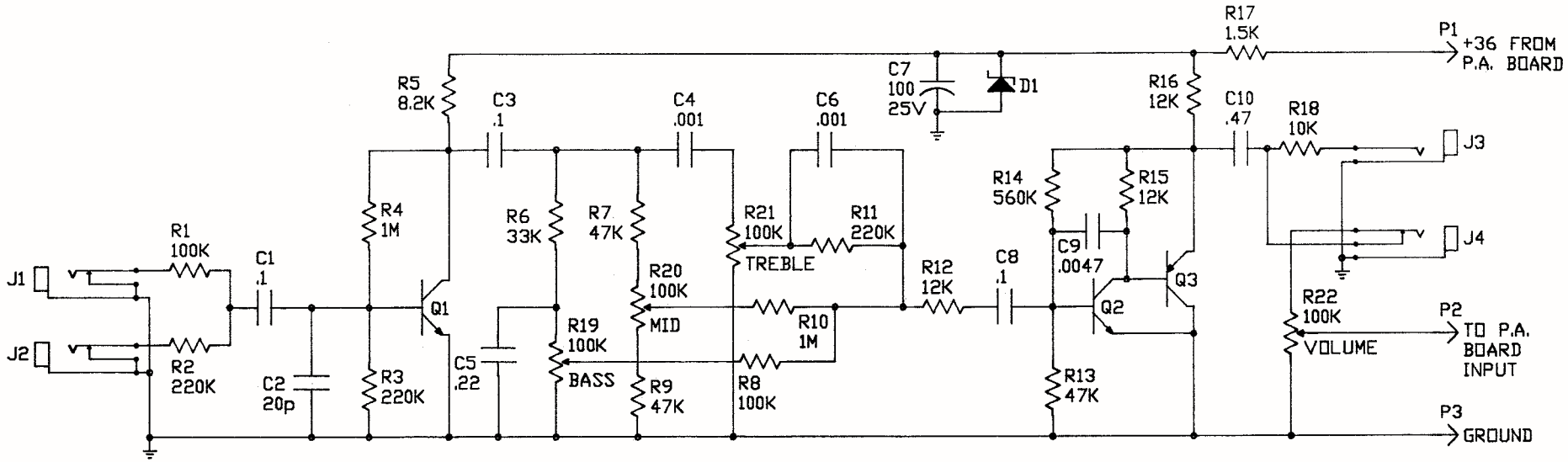

1. ALL RESISTORS IN OHMS AND 0.5W.
2. ALL CAPACITORS IN MICROFARADS UNLESS OTHER PREFIX MARKED, THEN REPLACE PREFIX (MICRO) IN UNIT (MICROFARAD) WITH MARKED PREFIX. ALL CAPACITORS 25V (MINIMUM VOLTAGE RATING) UNLESS MARKED OTHERWISE.
3. ALL VOLTAGES IN VOLTS.
4. ALL POTS, R19 TO R22: 100KB.
5. TRANSISTOR Q1: MPSA13.
6. TRANSISTOR Q2: 2N5088.
7. TRANSISTOR Q3: 2N5086.
8. ZENER DIODE D1: 1N5244B.
9. LAST REFERENCED DESIGNATION ON SCHEMATIC: R22, C10, Q3, D1, J4, P3.

RIC
Rickenbacker International Corp.
3895 S. Main Street
Santa Ana, Ca. 92707
Tel: 714-545-5574 Fax: 714-754-0135

SCHEMATIC, PREAMP RB30, RB60, AND RB120

SCALE NA	CHECKED BY J. HALL	DRAWN BY K. MASCARENHAS	
DATE 3/8/89			
SIZE B		DRAWING NO 19326	