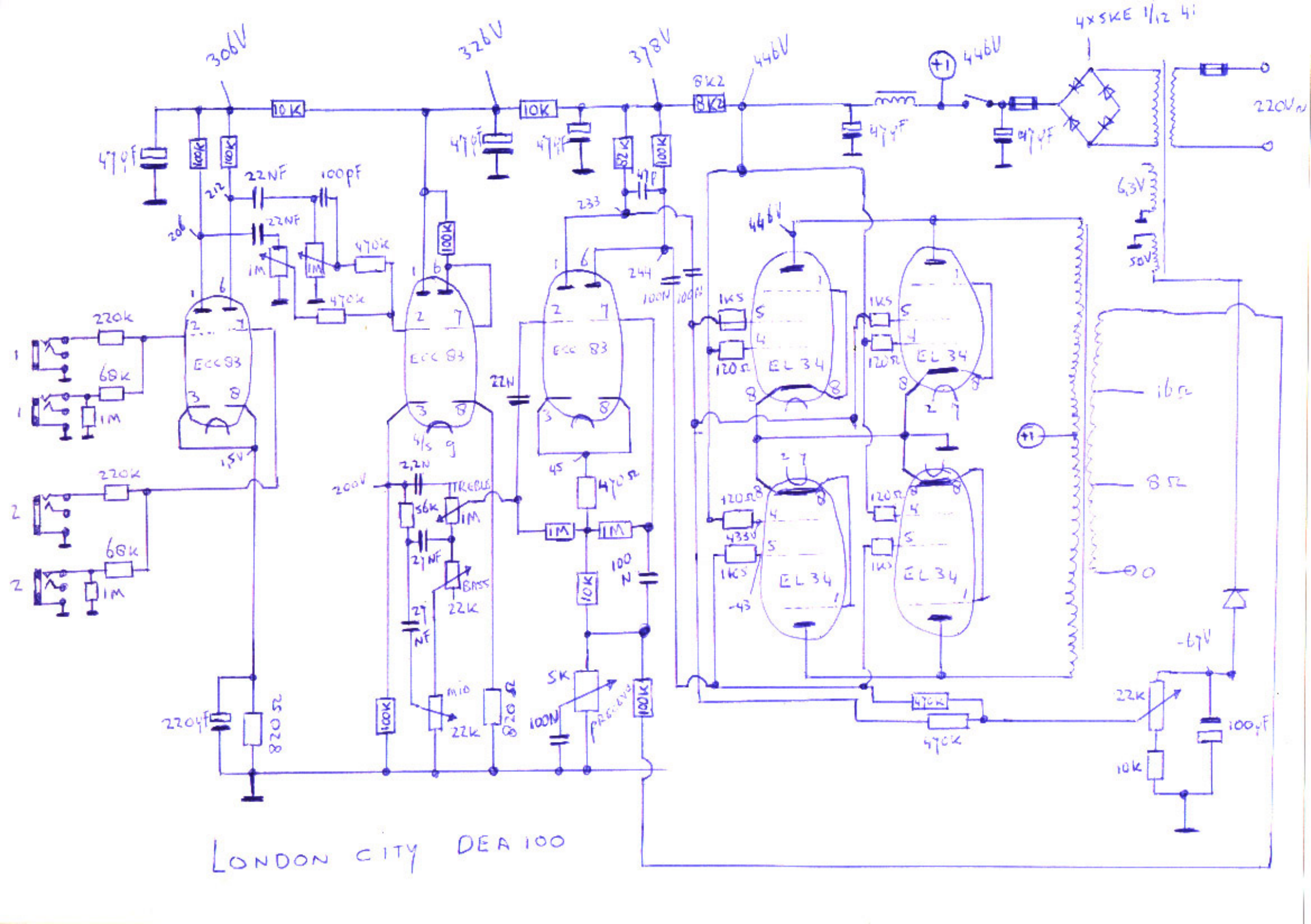

LONDON CITY DEA 100