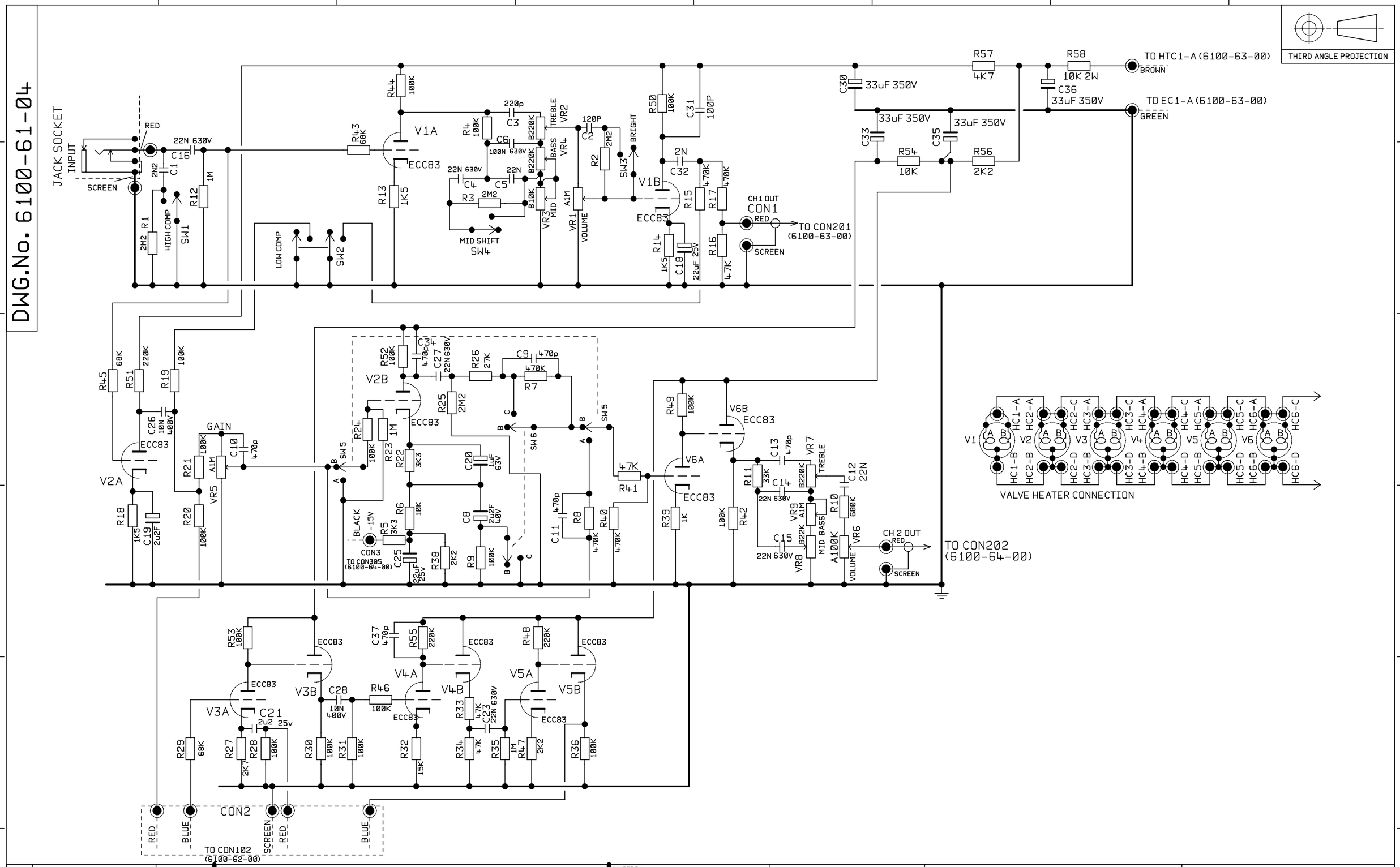

ISS	ECO NUMBER	DATE
9	0758	09/11/94
8	0601	08/06/94
7	0615	04/05/94
6	0466	14/12/93
5	0427	4/11/93

UNSPECIFIED HOLE DATA

A		H	
B		J	
C		K	
D		L	
E		M	
F		N	
G		P	

MATERIAL
MATERIAL THICKNESS
INTERNAL BEND RADII
EXTERNAL B/A
BEND DIE
DRAWN T.F DATE 15/05/92
CHECKED DATE
APPROVED DATE

DIMENSIONS IN
TOLERANCE (UNLESS UTHERWISE STATED)
DIMENSIONAL
CENTRES
ANGULAR
MODEL 6100/6101

Marshall

COPYRIGHT EXISTS ON THIS DOCUMENT.IT MUST NOT BE USED FOR ANY PURPOSE THAN THAT FOR WHICH IT IS SUPPLIED AND MUST NOT BE COPIED (IN WHOLE OR IN PART) WITHOUT WRITTEN PERMISSION FROM
© JIM MARSHALL (PRODUCTS) LTD.
DENBIGH ROAD, BLETCHLEY, MILTON KEYNES, MK1 1DQ.
TEL (0908)375411 FAX (0908)376118

TITLE
CLEAN/CRUNCH CCT
A3

DWG.No 6100-61-04
ISSUE 9